Expanding the Design Space:

Forging the Transition from 3D Printing to Additive Manufacturing

Matthew Amend

A thesis

submitted in partial fulfillment of the

requirements for the degree of

Master of Science in Architecture

University of Washington

2016

Committee:

Kimo Griggs

Brian R Johnson

Program Authorized to Offer Degree:

Department of Architecture

© Copyright 2016

Matthew Amend

University of Washington

Abstract

Expanding the Design Space:

Forging the Transition from 3D Printing to Additive Manufacturing

Matthew Amend

Chair of the Advisory Committee:
Prof. Kimo Griggs
Department of Architecture

The synergy of Additive Manufacturing and Computational Geometry has the potential to radically expand the “design space” of solutions available to designers. Additive Manufacturing (AM) is capable of fabricating objects that are highly complex both in geometry and material properties. However, the introduction of any new technology can have a disruptive effect on established design practices and organizations. Before “Design for Additive Manufacturing” (DFAM) is a commonplace means of producing objects employed in “real world” products, appropriate design knowledge must be sufficiently integrated within industry. First, materials suited to additive manufacturing methods must be developed to satisfy existing industry standards and specifications, or new standards must be developed. Second, a new class of design representation (CAD) tools will need to be developed. Third, designers and design organizations will need to develop strategies for employing such tools. This thesis describes three DFAM exercises intended to demonstrate the potential for innovative design when using advanced additive materials, tools, and printers. These design exercises included 1) a light-weight composite layup mold developed with topology optimization, 2) a low-pressure fluid duct enhanced with an external lattice structure, and 3) an airline seat tray designed using a non-uniform lattice structure optimized with topology optimization.

Acknowledgements

I want to thank my advisory committee for their unflagging support, their depth of knowledge, and above all their patience with me throughout this process. It has been a privilege and a joy to work with Professors Brian Johnson and Kimo Griggs.

Invaluable DMG Faculty and Classmates:
Prof. Rob Corser
Prof. Mehlika Inanici

Siddharth Jadhav
Yassi Esmaili
Calder Danz
Teng Teng
Roark Congdon
Mitch Wood
Lily Lin Lao
Nicole Peterson
Jeff Hudak
Peter Schiller
Scott Crawford

For my family, who were always loving, encouraging, supporting, accommodating, and helping. Plus: Piper, Drummer, and Heath, who were always helping whether I wanted it or not.

My Boeing Colleagues
Brett Lyons
Gregg Leggett
Mike Miller
Trevor Tucker
Sergio Sanchez
The RPM Lab staff

Technical Support
Rob Jopson, Altair
Jalel Nadji, Materialise
Steve Kubiak, Stratasys Direct
Stephan, Keith, Andraeus, Steffi, & Martin from EOS

Table of Contents

1. Acknowledgements 1
2. Tables and Figures 3
3. Introduction 4
4. Domains of Design Knowledge 8
5. Expanding the Design Space 9
6. Disrupting the Design Space 10
7. Case Study 1. 777: Representation 11
8. Case Study 2. 787: Material & Fabrication 12
9. Research Review: Design for Additive Manufacturing 13
    1. Design Tools for Managing Complexity 13
    2. Form-Finding in an Expanded Design Space 14
    3. Designing Material Properties 15
    4. Revising the Design Curriculum 16
10. Design for Additive Manufacturing in Practice 16
11. Design Exercises 18
12. Design Problem 1: Topology-Optimized Lightweight Mold 20
13. Design Problem 2: ECS Duct with Dual-Purpose Lattice 26
14. Design Problem 3: Airline Tray Table Hybrid Design 34
15. Conclusions 42
16. References 45

List of Tables and Figures

Fig. 1. Layers of AM part.

Fig. 2. Constructive Solid Geometry Tree.

Table 1. Elements of Domains of Design Knowledge.

Fig. 3. The Design Space.

Fig. 4. Expanding the Design Space.

Fig. 5. Standards enable encoding and translation between domains.

Fig. 6. Mature standards for encoding CAD data.

Fig. 7. Inaccurate encoding of 787 composite material properties.

Fig. 8. Cellular “Manufacturable Element” illustration.

Fig. 9. Carpal Tunnel restraint.

Fig. 10. Producing AM parts will require mature standards.

Fig. 11. Topology-optimized lightweight printed layup mold.

Fig. 12. STL mesh model imported into Materialise Magics.

Fig. 13. Inspire load case applied to tray table.

Fig. 14. Steel composite layup mold.

Fig. 15. Mold going into autoclave.

Fig. 16. Altair illustration of the Inspire design process.

Fig. 17. Rhino model of the mold and base.

Fig. 18. The mold is non-design space; the base is design space.

Fig. 19. The initial load case applied to the mold face.

Fig. 20. Displacement map.

Fig. 21. Form generated from “Max Stiffness” optimization.

Fig. 22. Printed mold model.

Fig. 23. Optimized design of mold half.

Fig. 24. Mold face nested with mold.

Fig. 25. Mesh converted to curves with Inspire “NURB-ifying” tools.

FIG. 26. 3-matic filling a volume with a lattice structure

Fig 27. Print of original duct.

Fig. 28 Original duct to be modified for AM.

Fig. 29. Materialise diagram of 3-matic design work flow.

Fig. 30. Defining and selecting a surface in 3-matic.

Fig. 31. Conformal UV grid pattern applied to the surface.

Fig. 32. Graph Curve example.

Fig. 33. Graph curves applied to the surface.

Fig. 34. Editing the lattice.

Fig. 35. Detail showing dense tessellation of lattice.

Fig. 36. Exporting graph curves as IGES. Fig X.

Fig. 37. IGES curve set represented in Materialise Magics.

Fig. 38. IGES curve set imported into CATIA

Fig. 39-42. Conformal lattice details on duct part.

Fig. 43. Tray table modeled in Rhino.

Fig. 44. Build temperature in a P800 is 290C.

Fig. 45. Distortion of the long axis of the printed tray.

Fig 46. Inspire load case. Forces in red, constraints in orange.

Fig. 47. The “design space” filled the underside of the tray.

Fig. 48. Printed SLS tray with unfilled design space.

Fig. 49. Warp of tray with unfilled design space.

Fig. 50. Printed SLS tray with optimized distribution.

Fig. 51. Warp of tray with optimized distribution.

Fig. 51. Printed SLS tray with “negative” distribution.

Fig. 52. Printed SLS tray with “negative” distribution.

Fig. 53. Warp of tray with negative distribution.

Fig. 54. Inspire load case result.

Fig. 55. Creation of volumes for variable-density lattice fill.

Fig. 56. Variable-density lattice structure.

Fig. 57. Variable-density lattice detail.

Fig. 58. Tray with lattice fill.

Fig. 59. Distortion of lattice tray is minimal.

Fig. 60. Detail of lattice fill.

Introduction

A significant differentiator between art and design is the influence of external constraints. One of the principal activities of design is “form-finding.” One way to describe form-finding is an exploration of the relationships between conceptualization, representation, and fabrication. Conceptualization is limited only by the designer’s imagination, but representation and fabrication are technologies, and therefor act as constraints on the “Design Space” which defines the practical boundaries of form-finding. What happens when new technology significantly reduces those constraints? The Design Space is expanded, but exploration of the expanded design space becomes more complicated. The question relevant to design computing, then, is what happens to the designer’s process when these activities become computational? What if the design software iterates the modification of the structure? What if the fabrication device creates the material? How does the designer re-conceptualize his or her task of form-finding?

This thesis will explore a recent example of this problem: the emergence of Additive Manufacturing (AM). Commonly known as 3D printing, AM has captured the imagination of the design world. It represents a rare case: the invention of a fundamentally new way of making things. It has implications for all of the domains of design knowledge and practice: material, fabrication, and representation.

Material, traditionally selected from standardized stocks with uniform densities and fixed properties, may be created “on the fly” with variable distribution and tailored properties. Fabrication methods, typically restricted to cutting an object out from a larger mass of material or forming material into shape with heat or pressure, now include building an object up by selectively distributing material in layers (Fig. 1).

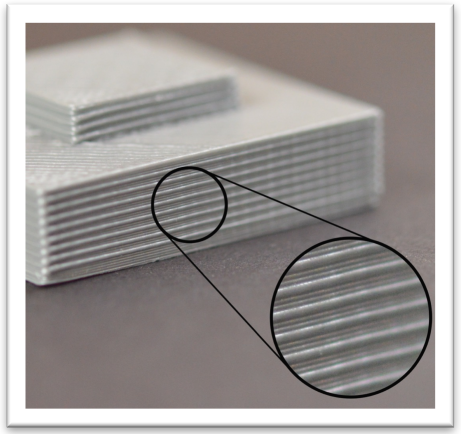

Fig. 1. Layers of AM part.
Source: https://www.simplify3d.com/wp-content/uploads/2015/09/Lines-On-Side-Of-Print.jpg

Significantly, the design tools that evolved to represent established materials and fabrication methods lack features needed to fully exploit the capabilities of Additive Manufacturing. A design tool will represent structure as a physical geometry and material as physical attributes assigned to the geometry. The most common present-day method to 3D representation, Constructive Solid Geometry (CSG), was developed (and tends to be biased) to represent objects that are typically fabricated with Computerized Numerically-Controlled (CNC) type tools: Milling machines, routers, lathes, brake forming tools, and machined molds. Accordingly, the structures represented tend to have geometries such as blocks, plates, tubes, constant wall thicknesses, round holes, and flat surfaces (Fig. 2).

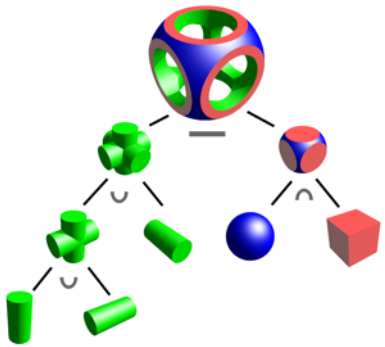

Fig. 2. Constructive Solid Geometry Tree.
Source: https://commons.wikimedia.org/wiki/File:Csg_tree.png

Material is represented as properties assigned to structures. Designers then modify these structures and materials in detail to meet specific requirements. The designs are tested against these requirements and modified again as necessary. This iterative cycle of select, modify, and test is the basic pattern of "optimization." The number of iterations is generally limited by time and money. Accordingly, in "real-world" practice designers tend to select structures and materials they understand and modify them in ways that are economical to test and fabricate. Optimization has been constrained by economics. Complex, novel structures are difficult to fabricate and test. Exotic materials are expensive to acquire and often difficult to work with. Consequently, much of the process of testing has become computational. Software tools like Finite Element Analysis (FEA), Computational Fluid Dynamics (CFD), and simulation enable rapid, relatively inexpensive iterative testing of a form (structure & material). In addition, designers who learned their trade using established materials and fabrication methods understandably acquired assumptions about which materials and methods were best suited to a specific task. In order to fully exploit the capabilities of Additive Manufacturing, designers must learn new ways of thinking about

design, have representation tools that enable creation of complex geometry and material distribution, and have encoding software (file formats) that fully describe all features of geometry and material.

To transition Additive Manufacturing from a prototyping method into a true production process in a regulated environment such as airplane manufacture, additive materials and related manufacturing processes must be refined until they satisfy existing industry standards and specifications (Cunningham, 2015). Some additive materials and processes will simply require testing and review to satisfy existing standards. Other materials and processes may require new standards (and standards organizations) to be developed. Designing components and assemblies suited to AM will require the development of a new class of design representation (CAD) tools. “Hybrid modeling” software can generate efficient and often highly-complex topologies or replace monolithic solid volumes and surfaces with “mesostructures” (Rosen, 2007) such as lattices or materials that are graded in density or composition (Oxman, 2011). In addition to enhanced digital modeling environments, these tools may require greater computing power, and the development of file formats that encode metadata about the “manufacturable elements” (Rosen, 2007) of an object. This is similar to the development of the STEP (Standard for the Exchange of Product Model Data) format which encoded product information that could facilitate manufacturing by different applications (Griggs et al, 2005 p. 227). The current standard file format for additive manufacturing is the STL (Standard Triangulation Language) format which is a simple polygon mesh incapable of encoding information about material, manufacturing method, features, etc.

Finally, designers will need to learn how to employ such tools, and organizations will need to develop strategies that allow new modes of thinking, and new techniques to supplement existing structures. To maximize the value of Additive Manufacturing, designers will need to modify established assumptions about creating form and defining material. Approaches might vary from redesigning existing products using hybrid modeling tools in order to optimize them for Additive Manufacturing, to rethinking entire product lines to take advantage of the many new material and shape characteristics available, and their associated potential manufacturing efficiencies. Realizing the three aforementioned objectives will guide the way towards establishing the discipline of DFAM.

Domains of Design Knowledge

All of the structures, tools, and objects we make and use can be described as material that has been fabricated into a form corresponding to some design intent which is informed by knowledge about the material properties and fabrication methods. The designer conveys his or her intent to the fabricator with a representation such as drawings with notations. These three areas of technology—material, fabrication, and representation—compose the primary domains of design knowledge (Table 1). Material, obviously, is any physical substance that can be refined into a useful object. Historically there has been a progression from natural materials such as stone and wood, to ceramics, metals, polymers, and composites. Whatever the material, designers seek some common properties: obtainability, ease of forming, performance, and consistency. Fabrication is the method by which material is formed into a desired shape or configuration. The methods are numerous, but can be categorized as discrete (singular), batch, or continuous. Representation is the domain of the designer. It is the means by which a designer's imagination is translated into "information-rich" media that can be used to guide fabrication. It has been called "externalized cognition" (Self, 2014) and "Reflection-in-Action" (Schon, 1983).

Table 1: Elements of Design Domains. Source: Author

Material	Fabrication	Representation
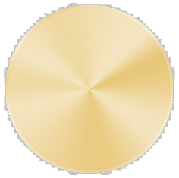		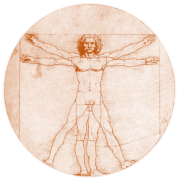
• Obtainable • Can be refined • Consistent properties	• Discrete • Batch • Continuous	• Externalizes Cognition • Communicates Intent • Encodes Properties
• Natural • Fiber • Ceramics • Metals • Polymers • Composites • Additive materials • Nano-materials	• Casting • Forging • Machining • Injection molding • Molding & Tape-laying • Additive manufacture • Nano-assembly	• Sketching • Model-making • Drafting • 2D CAD • 3D CAD • Topology Optimization • Generative • "Material Computation"

Our capacity to design and build is determined by the scope of these knowledge domains and the extent to which they "overlap". In the abstract, this region of overlap can be conceptualized as the "Design Space" (Fig. 3).

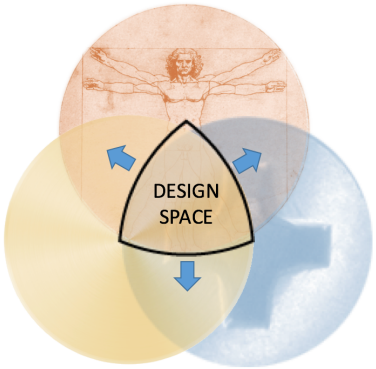

Fig. 3. The Design Space
Source: Author

While the designs of human imagination have few limitations, the objects we make and use are subject to practical constraints such as technology, economics, time, and even ethics or politics. It is commonly expressed that *constraints* are what distinguish design from art as a practice. Three areas of knowledge—material, fabrication, and representation—can be understood as the core domains of design knowledge. Any fabricated object can be seen as an embodiment of the domain knowledge possessed by the person or people who made it. A simple crafted object may embody the domain knowledge of a single person, while a complex structure or industrial machine inevitably embodies the combined domain knowledge of hundreds to thousands of specialists from many disciplines. Success in design depends on the ability of such specialists to communicate their knowledge across disciplines. Any truly effective, reliable manufactured object must emerge from the intersection of these different understandings, which together effectively define a "Design Space."

Expanding the Design Space

Innovation occurs constantly within design domains. When a new element is introduced in one domain, it typically enables advances in the others—provided there is a means to achieve the necessary "overlap". For example, in the 1960's, digital CAD supplanted manual drawings and computer-controlled milling supplanted manual milling, but the two technology domains remained independent of each other without a means to encode the CAD drawings and transmit them to

the mill. As advances are made in every domain, effective communication of design intent grows between specialties (Fig. 4).

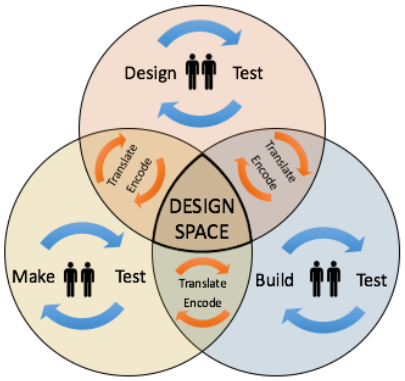

Fig. 4. Expanding the Design Space
Source: Author

Disrupting the Design Space

The introduction of a new element (i.e. technology, method, resource) in any domain can expand the design space, but it can also disrupt established systems of production. This disruption derives from the challenge of integrating new technology with existing tools and communicating new knowledge to the members of the design organization. Introduction of a new material may require development or adjustment to fabrication processes and design representations. Development of a new fabrication process may not see full exploitation until representation tools are revised to take advantage of it. To facilitate the adoption and integration of new design technologies, the international system of standards was developed. Standards are simply a documented set of generally-agreed upon definitions, tools, and methods describing some application of technology (Griggs et al 2005 p. 18). Their critical function is to enable the encoding and transmission of design knowledge across domains (Fig. 5). Without effective knowledge transmission, fabrication of complex products can be compromised, as will be described in the following case studies.

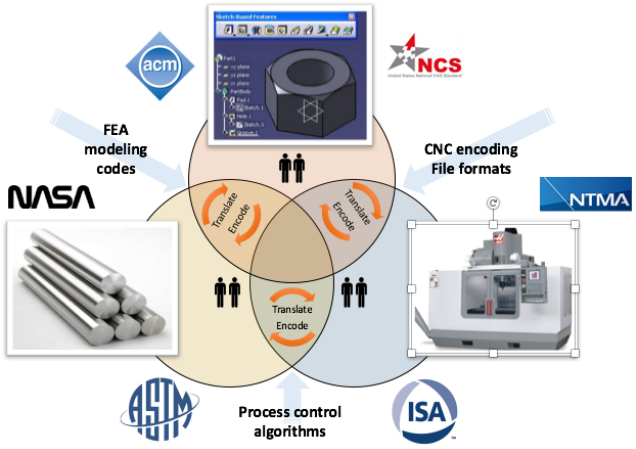

Fig. 5. Standards enable encoding and translation between domains.
Source: Author

Case Study 1: Digital Representation & the Boeing 777

The 777 was The Boeing Corporation's first fully "digital airplane" program, meaning the airplane was no longer represented by conventional drawings but rather in 3-dimensional CAD. The 777 was a predominantly aluminum aircraft, and industry standards for digital machining were mature, so change occurred in only a single domain (Fig. 6).

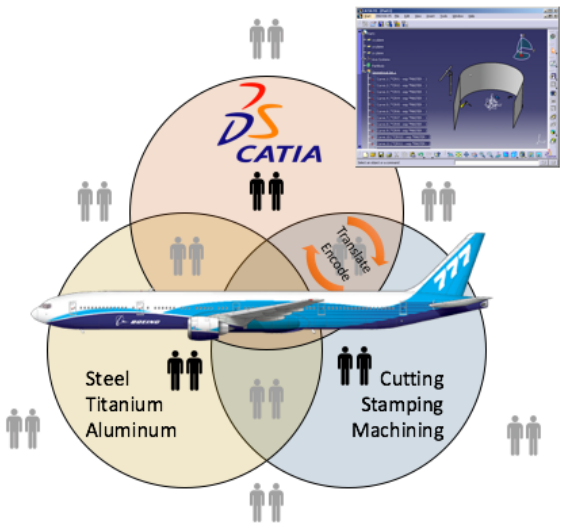

Fig. 6. Mature standards for encoding CAD data facilitated digital manufacturing of the 777. *Source*: Author

The primary reasons for adopting Dassault CATIA were its comprehensive suite of parametric modeling features and the capability to export data to machine tools. Additionally, the ability of CATIA to encode material properties facilitated digital structural analysis of parts using finite element analysis software. This standardization—the "Model-Based Definition" or MBD—enabled an effective overlap between representation, fabrication, and material domains. When CATIA became the standard design tool for the 777 program, every designer assigned to the program had to learn to use it—a major organizational challenge for Boeing (Marion et al, 2012). In essence, the company had to adapt to an entirely new representation system. It was a significant disruption to the design organization, but manageable because Boeing had an established training organization and was able to eventually offer more than 100 courses in CATIA. In a few years the majority of the design organization was proficient with CATIA.

Consequently, the 777 program was one of Boeing's most successful, coming in on time and on budget with very few problems in development.

Case Study 2: Material and Fabrication & the Boeing 787

In contrast to the "single change" 777 program, the 787 airplane can be considered a case study of a design program where new technology was introduced in two design domains. First, the material from which the aircraft was made changed from metals to carbon fiber composites. That change necessitated a second shift, in the domain of fabrication, as the methods used for composite fabrication are significantly different than those for metals. So not only did the manufacturing workforce need to be trained in new methods of fabrication of composite materials, but the engineering community also had to be trained in the design of composite materials. Both the materials and the manufacturing methods changed, but the company did not have mature, fully capable standards and processes in place to encode the necessary information across the three design-space domains. The design community was confronted with a huge learning curve resulting in delays and cost over-runs. The training program was not adequate to reeducate the workforce in a timely fashion. A resulting problem, for example, was a significant structural failure that was not anticipated by the analysis software (Talbot, 2008) which suggests that the representation tool did not properly capture or encode the properties of the materials (Fig. 7).

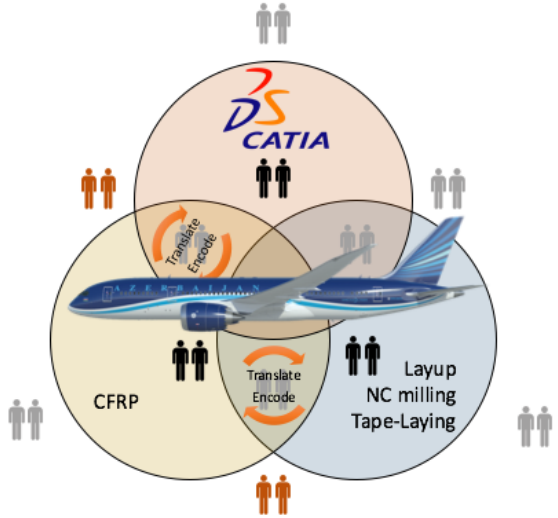

Fig. 7. Inaccurate encoding of 787 composite material properties led to inadequate software models. *Source*: Author

Research Review: Design for Additive Manufacturing

Additive Manufacturing introduces the first entirely "digital" method of fabrication in the sense that there is no intermediary representation, such as drawings. Definition of the geometry to be built comes from a 3-dimensional CAD model and control of the building process is entirely computer-driven. There are many variations of AM but they all share common features: the geometry of the part comes from a CAD model, the model is "sliced" into 2D cross-sections, the printer builds up the part geometry by "stacking" the cross-sections in successive layers of a fluid raw material (typically liquid resin, powder, or molten plastic), and the cross-sectional areas are solidified by precise application of energy such as light, heat, or a chemical binder. At the end of the layer-stacking process, the completed part is removed from the raw material. This process avoids many of the limitations of traditional manufacturing methods and is capable of fabricating complex shapes that would be physically impossible or prohibitively expensive to make otherwise. The unique affordances of AM have been compiled by Hod Lipson of Columbia University into a set of "principles of 3D printing" to inform design thinking (Lipson, 2012). Among them: manufacturing complexity and variety is "free", lead time and need for assembly are reduced, more materials are available with less waste produced, design possibilities are increased while manufacturing skill required is reduced, and the industrial "footprint" is reduced, even to the point of portability.

Design Tools for Managing Complexity

Hague et al (2002) also enumerated and described specific affordances of DFAM such as: "complexity for free" meaning that highly-complex geometry cost no more to 3D print than simple shapes; "freedom of form", meaning that 3D printers are not restricted by traditional requirements such as draft angles, constant cross-sections, split lines, etc.; "rationalization of components", meaning that what once needed to be made from multiple simple parts could be reduced to one complex part; and "functionally graded materials", meaning that 3D printers can combine different materials at different locations to alter material properties across a part (though speculative at the time, this is now a reality with polyjet printers). Additionally, the implications for end-users were analyzed. With "mass-customization" enabling

end-users to participate directly in the design, realistic constraints need to be imposed on the design freedom of users who may have little knowledge of design, materials, or CAD/CAM. The authors proposed innovative CAD software with constraint-based user interfaces and tools to collaborate with designers.

Form-finding in an Expanded Design Space

Rosen (2007) proposed a theoretical framework for a CAD/CAM tool purpose-built to take advantage of three affordances he ascribed to AM: shape complexity, material complexity, and hierarchical complexity (the ability to design & fabricate at multiple scales). His proposed CAD tool combined features of parametric CSG for form development, and a "cellular" approach analogous to a voxel-based modeler in which the structure is decomposed into cells that are "Manufacturable ELements", or “MELs” (Fig. 8).

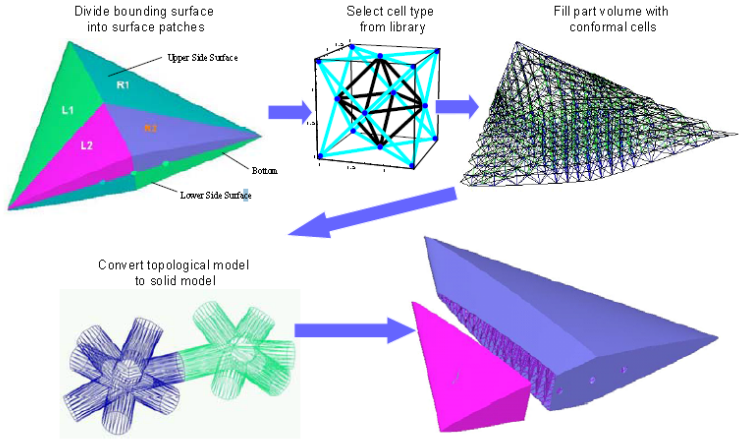

Fig. 8. Cellular “Manufacturable Element” illustration.
Source: Rosen, 2007.

Based on AM process and material selection from a library, the modeler constructs appropriate MELs (e.g. lattice elements) to fill in the internal volume of the part. Rosen's overall conclusion is that "DFAM should be concerned with the exploration of expanded design spaces, rather than the focus on constraints imposed by the manufacturing method, as is typical of DFM methods."

Designing Material Properties

A number of publications by the MIT Media Lab's Mediated Matter design research group describe the concept of "Material Ecology". The group's founder, Neri Oxman, argues that it is possible to use AM technology to perform "material-based design computation" which she defines as "the process of computationally enabled form-finding informed by material properties." The core of this process is the concept of Functionally Graded Materials (FGMs) which are characterized by "the gradual variation in composition and structure throughout their volume". The gradation is achieved by means of subdividing the volume into discrete units such as cells, fibers, or lattice elements which vary in properties such as size, density, and orientation. These elements have been called "MEL's" (Manufactured ELements) or "maxels" (akin to a "voxel"). By controlling the properties of each maxel, the designer can control the performance of the material (Fig. 9).



Fig. 9. Carpal Tunnel restraint; “The custom-fit property-distribution functions built into the glove allows for passive but consistent pulling and stretching simultaneously.” *Source:* Oxman, 2011

The problem, of course, is how? Oxman proposes a novel CAD tool called a Variable Property Modeler (VPM) which maps control functions to material properties. Object geometry can be defined as discrete (constant) or variable (functionally gradated). Of course, a designer is unlikely to know the optimal areas to add or remove material or exactly how to optimize material properties at every location on an object. This would be an expression of the unmanageable complexity described earlier. The VPM envisioned by Oxman would combine key features such as volumetric ("voxel"-based) modeling, Finite Element Analysis (FEA) capability, and a

particle system modeler. All these capabilities enable the representation and simulation of physical properties and behavior (performance) of individual elements or the whole object. Such a VPM tool would indeed offer amazing capabilities, but at a price. Users would need to learn a very different user interface and concept of operation compared to current traditional CAD/CAM software, let alone become educated in an entirely new DFAM methodology in order to take advantage of it. If the goal is to make a part or assembly optimized for minimal material use, it is likely that most designers would require guidance from some sort of expert system built in to the application.

Revising the Design Curriculum

Researchers are investigating the development of design tools that take advantage of the affordances of AM, such as feature databases, material libraries, expert systems, and CAD/CAM software that allows material-based computation. The design education profession will require new curriculum to train designers in the novel nature of design for additive manufacturing. Geraedts et al (2012) at the Delft University of Technology attempted to answer the question "How should designers adapt or change their way of working to benefit from the possibilities of AM?" To that end they developed a new analytical model for a DFAM methodology and tested it with industrial design students in an experimental full-semester course over a three-year period. Their model sets up a process in which the designer can begin with the desired performance and move inductively to the best AM process, or start with an AM process and simulate the predicted performance. The authors concluded that AM technology will offer significant improvement in product design and manufacturing economics, but only if revised education prepares designers. The authors concluded that AM technology will offer significant improvement in product design and manufacturing economics, but only if revised education prepares designers.

Design for Additive Manufacturing in Practice

While the implications of DFAM are becoming widely understood, in the author’s experience, the applicable knowledge of the design affordances of AM is less prevalent. Complicating practical inquiry is the fact that the technology remains embryonic and unreliable in

practice, making it difficult to prove new DFAM methods in the field. Research shows the necessity of developing new CAD software tailor-made for DFAM. Long-term studies with many subjects taking on the main challenges of DFAM (designing non-traditional structures, specifying functionally-graded materials, working at multiple scales, and running simulations) is a way to identify potential methodology and tool solutions in detail. The problem is essentially one of overcoming complexity: complexity of geometry (CAD interface), complexity of fabrication (AM reliability), complexity of processing (simulation), and complexity of design knowledge (DFAM education).

As much as there is potential to expand the design space, there is at the same time an obvious likelihood of disruption. In order to mitigate this disruption, full integration of the three domains is needed (Fig. 10). This will require:

- A representation tool tailored to Additive Manufacturing that allows the designer to create unconventional, complex and optimized geometries.
- A file format that is able to encode all relevant information about a design and transmit it to the printer.
- Additive materials whose properties are fully understood and predictable so representation tools can perform accurate analysis and create the part exactly as specified
- Printers that incorporate real-time monitoring to enable process controls.

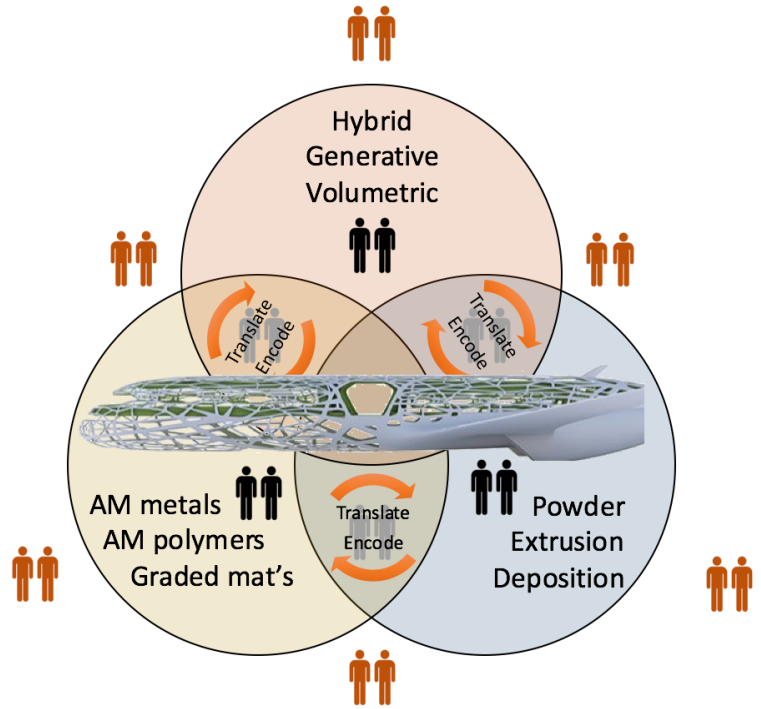

Fig. 10. Producing aircraft parts with AM will require mature standards to encode material properties and process parameters. *Source*: Author.

Design Exercises

While the author has had significant experience with traditional fabrication, and has been intimately involved in Boeing's use of AM for rapid prototyping (often using traditional representational tools and design goals) it was felt that a more rigorous inquiry into future manufacturing was needed as part of the thesis. Three hypothetical designs were chosen to reflect different design goals within the organization.

There is tremendous interest in using Additive Manufacturing in the production of aircraft components. Some primary goals are to reduce costs by eliminating production tooling, to reduce part weight (and increase payload) by using material more efficiently, reduce part count and assembly time by combining multiple subcomponents into a single part, and streamline manufacturing by printing production tooling. The industrial context for these exercises is the advancement of AM materials and processes. The development of a high-performance AM polymer powder based on Polyether-ketone ketone (PEKK), plus an SLS machine capable of printing at the high temperatures required to melt PEKK, has created the opportunity to produce actual AM production parts for use on aircraft. Parts made from the PEKK material have sufficient temperature tolerance and tensile strength to qualify to existing industry standards for use on commercial airliners. With two of the three domains "expanded"—material and process—the challenge lies in the domain of representation. What kind of design tools and methods are best-suited to exploit the chief affordance of AM, such as geometric complexity, consolidation of components, and efficiency of material distribution? While AM with polymer material is not yet approved for use on aircraft as primary or secondary (flight-critical load-bearing) structures, there are possible applications for "tertiary" structure such as ducting, interior parts, housings, or as previously mentioned, factory tooling. The goal of the design exercises was to explore the affordances and constraints of DFAM using existing "hybrid" representation software that combine solid modeling features with the ability to generate forms through algorithms and analysis.

The first exercise used Altair SolidThinking “Inspire” topology optimization software to design a lightweight layup mold exploiting PEKK’s ability to withstand autoclave temperatures. (Fig. 11).

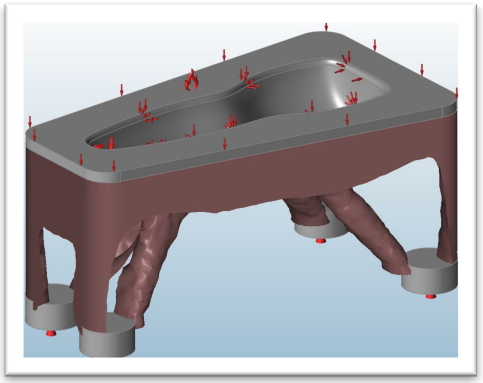

Fig. 11. Topology-optimized lightweight printed layup mold. *Source*: Author

The second exercise used Materialise “3-matic” generative design software to modify an existing low-pressure tube (Fig. 12) with a complex lattice structure that serves the dual-purposes of lightweight stiffening and large surface-area-to-volume ratio to facilitate cooling.

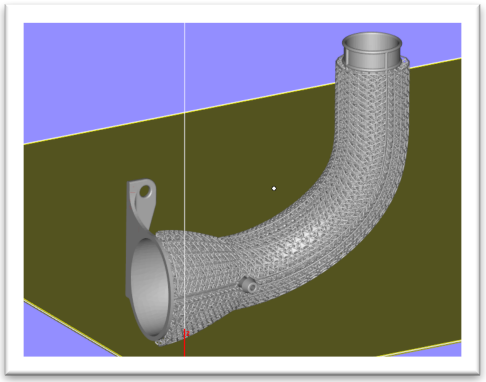

Fig. 12. STL mesh model imported into Materialise Magics. *Source*: Author.

The third exercise combined both applications to design a light but rigid and flat airline tray table (Fig. 13). Optimization tool was used to counteract the deforming effect of the high-temperature SLS process.

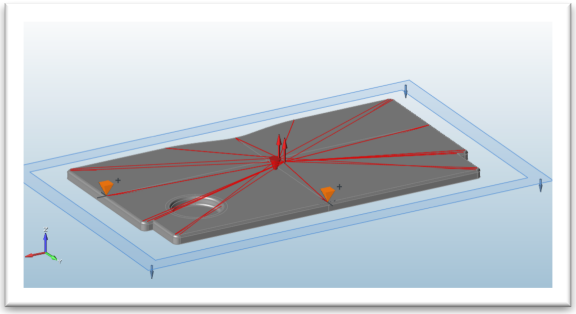

Fig. 13. Inspire load case applied to tray table. Forces in red; constraints in orange. *Source*: Author

Exercise 1: Topology-Optimized Lightweight Mold

The intent of the first design exercise was to demonstrate the use of topology optimization to design a mold capable of withstanding a load while using minimal material to reduce weight. Layup molds are very commonly used to make composite parts (Fig. 14).

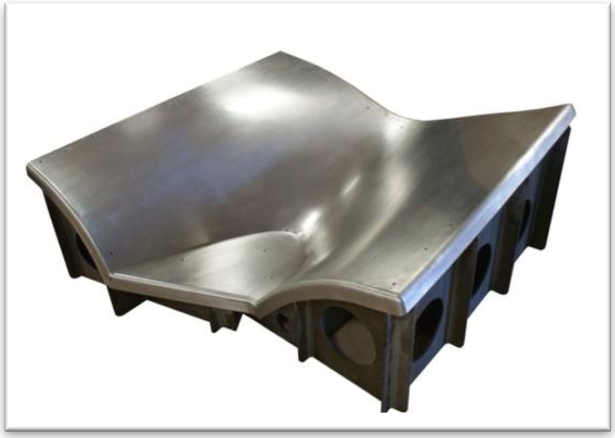

Fig. 14. Steel composite layup mold.
Source:
http://www.integran.com/Portals/212577/images/GE%20Composite%20Nanovar%20Tool-resized-600.jpg

Typically, they are machined from steel to very accurately create complex shapes that will not deform under the heat and pressure of an autoclave (Fig. 15). Yet steel molds are heavy, expensive, and require weeks or month of lead-time to produce. Using the high temperature "PEKK" polymer that will tolerate the conditions in an autoclave, it is possible to 3D print layup molds.

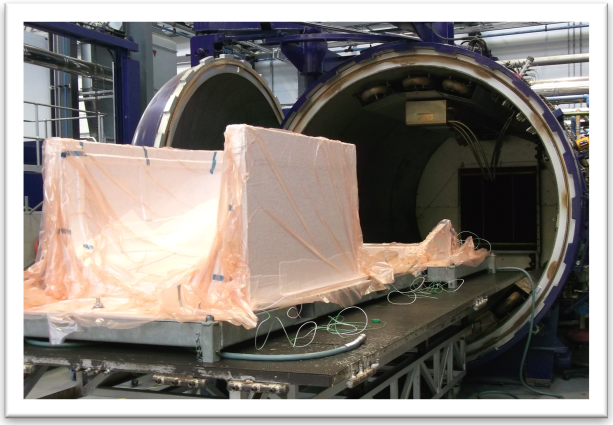

Fig. 15. Mold going into autoclave.
Source:
http://cuer.businesscatalyst.com/images/blog/DSCF2364.JPG

The benefits would include reduced cost, faster production and reduced tool weight—a plus when layup molds must be handled during manufacturing. However, the PEKK material is expensive, so the design intent is to make a mold using the least amount of material possible that remains strong and stiff enough not to deform in the autoclave. Topology optimization is an ideal method for solving this type of design problem. This process analyzes the geometry of the

part and the physical forces it is subjected to (the load case) and calculates the most efficient distribution of material to handle the loads (Fig.16).



Fig. 16. Altair illustration of the Inspire design process. *Source*: http://cdn2.hubspot.net/hub/363995/file-510539562-jpg/Inspire_captions_sm.jpg?t=1470757025948

The shapes generated are typically “organic” in appearance, with compound curves, uneven surfaces, and varying thicknesses that would be difficult to create by machining or molding but are easily formed by a 3D printer. The design software used for this exercise was Altair Inspire. Inspire is a derivative of Altair’s high-end optimization application “Hyperworks”.

While Hyperworks is a comprehensive suite intended for use by specialist engineers, Inspire is meant to be a user-friendly means for designers to develop material-efficient structures. Traditionally designers use their knowledge of structure to inform their creation of a basic configuration, which is confirmed through analysis and refined though iterations. Essentially, the model is for the designer to “give form” and the software to refine it. The innovation using topology optimization at the beginning of the design process inverts this model. Instead, the software gives form and the designer refines it.

Inspire has basic modeling functions but is not intended as the primary design tool. Any CAD software can be used to create the initial form. The method is to separate the object into “design space” and “non-design space.” Non-design space is any fixed feature that will not be optimized; in this case the mold surface, vacuum tubes, and feet. The design space is the volume intended to be optimized; in this case the mold base.

The CAD modeler Rhino 5 was used to design the basic mold form (Fig. 17). The design and non-design elements were created as distinct objects which were imported into Inspire.

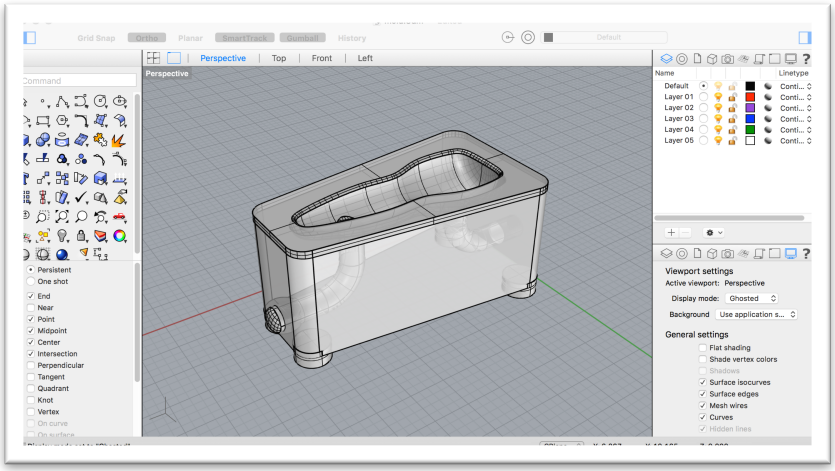

Fig. 17. Rhino model of the mold and base. *Source*: Author.

In Inspire, the first step is to check each element for any errors that may have occurred in translation, designate elements as design or non-design space, and then assign material properties to each (Fig. 18).

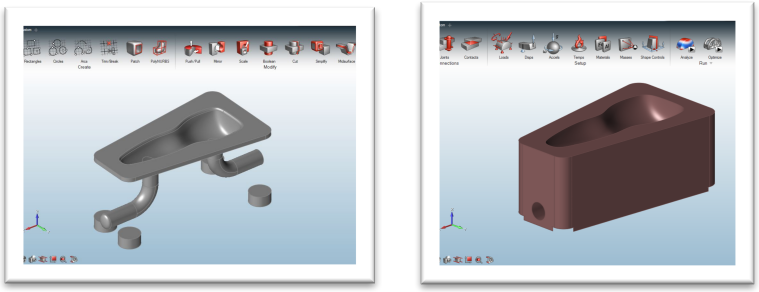

Fig. 18. The mold is non-design space; the base is design space. *Source*: Author.

In this case the properties of the high-temperature PEKK polymer had to be entered, as they were not in the material database that came installed with Inspire.

For designers who do not have a structural engineering background the biggest challenge of topology optimization is developing the load case correctly. It is necessary to understand the principal forces, where they act on the part, in what direction(s) and in what magnitude. The load case must accurately reflect real-world conditions. If the designer creates an inaccurate load case the optimization software will create a shape that will not correctly reflect the real-world problem. The designer must have a working understanding of engineering

mechanics and statics, or else consult with a specialist. For this exercise, the load case had to reflect the overall pressure force on the mold from the autoclave and the thermal load from the heat (Fig. 19). It is important that the load case be applied to the non-design space (gray), not the design space (brown). In this case the intent is to see where material will be eliminated and retained in between the mold face and the feet.

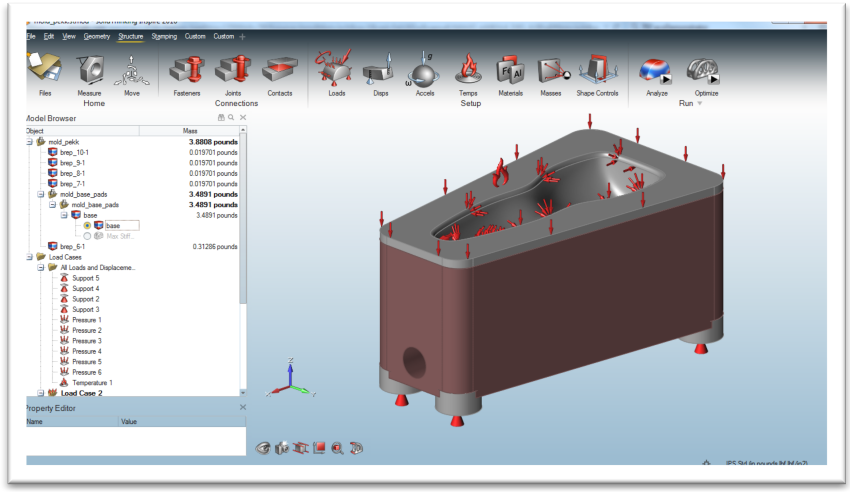

Fig. 19. The initial load case applied to the mold face. *Source*: Author.

Once the load case had been created, the first step was to do a displacement analysis. This is essentially a simple check on the load case. It does not create geometry; rather it predicts how that load case will cause geometry to deform under load. If there is no displacement at all, it suggests that the load case is too small. Alternatively, if there is extreme displacement, it suggests that the load case is too large. Displacement analysis is a magnitude check to confirm that the load case is in the right range (Fig. 20). Using displacement analysis, adjustments were made to the load case.

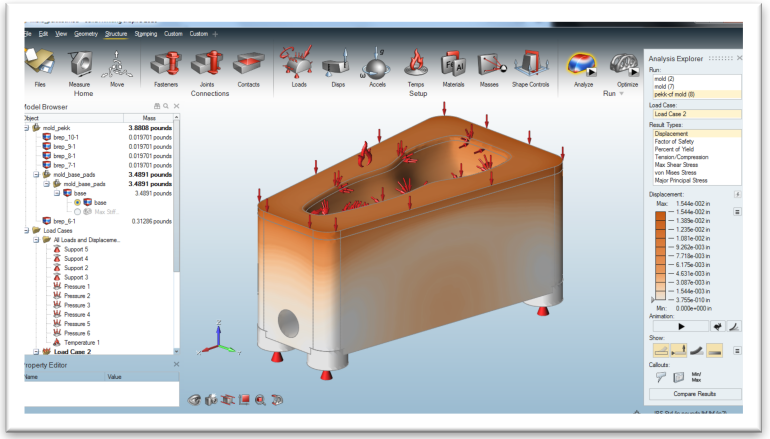

Fig. 20. Displacement map. *Source*: Author.

Once the load case is determined, a ‘minimum mass” optimization is run. This type of optimization determines where material is required. The optimizer is instructed to remove an arbitrary percentage of

material, typically 70%, and calculate where the remaining material is needed to minimize displacement (the equivalent of maximizing stiffness). This subtractive process reveals a distribution of material that reflects how the loads are transmitted—the “load paths”—in this case from the mold face to the feet (Fig. 21).

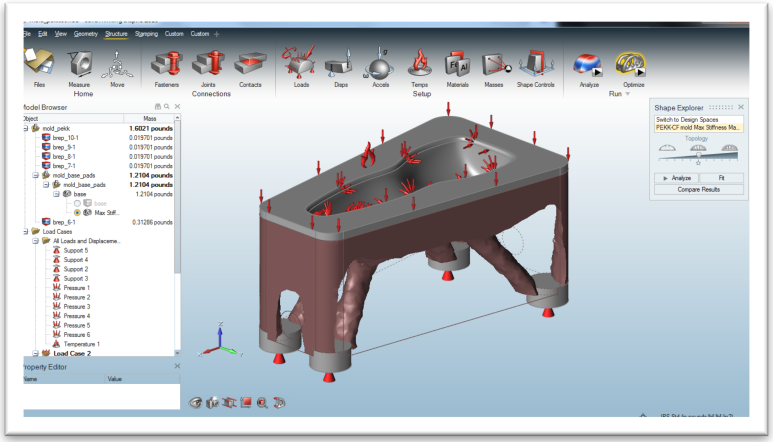

Fig. 21. Form generated from “Max Stiffness” optimization. *Source*: Author.

At this point an optimal structural *shape* is established, but the amount of material removed (70%) was arbitrary so it is not known if the *size* of the structural elements (legs) are optimal—they could be too thin or unnecessarily thick.

A final problem to be resolved is the conversion, if required, to a curve-based or parametric solid model. This type of volumetric computation inherently subdivides the object in a way so that the resulting model is a polygon mesh. The advantage of printing the mold is that it is possible to print the polygon model as-is. An SLS printer can simply build the rough shape, saving time and cost. In this case the mold was printed using an SLS printer but not using a high-temperature polymer and machine due to cost. It is proof of concept using the same process. The printed part is of good quality and representative of the output from a high-temperature machine (Fig. 22).



Fig. 22. Printed mold model. *Source*: Author

The example part was printed in sections to allow separation of the non-design space (mold face and vacuum tubes) and design space (Figures 23-24).



Fig. 23. Optimized design of mold half. *Source*: Author



Fig. 24. Mold face nested with mold. *Source*: Author

If further refinement of the model is required then the mesh must be converted into a solid model based on curves, typically a “NURBS” (Non-Uniform Rational B-Spline) model that can be imported into a full-featured 3D CAD system such as CATIA. This is not straightforward with complex shapes. Inspire has basic tools that convert the rough polygon mesh into NURBS-based elements (Fig. 25). In practice they are limited and often cannot handle complex transitions without significantly altering the general configuration.

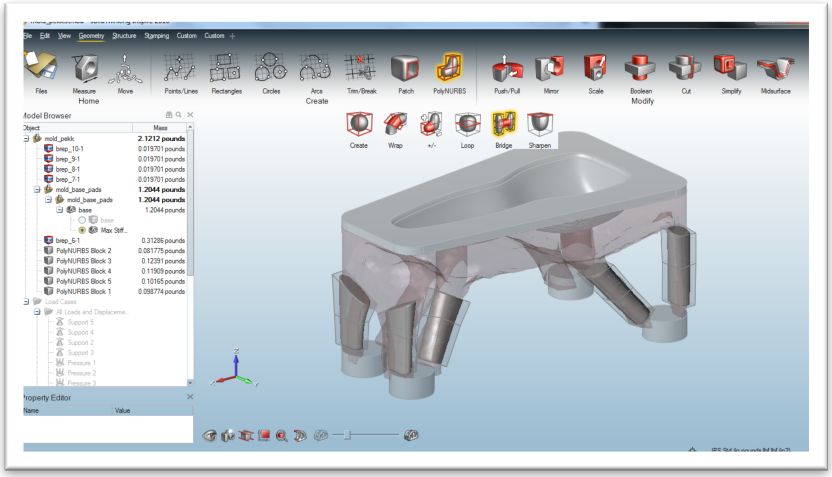

Fig. 25. Mesh converted to curves with Inspire “NURB-ifying” tools. *Source*: Author.

Exercise 2: ECS Duct with Dual-purpose Lattice

The second design exercise was intended to demonstrate the use of a "generative" design tool, in this case Materialise 3-matic, which is tailored for 3D-printing applications. It can generate 3-dimensional surface textures and includes a "Lightweight Structures (LWS) module" which enables creation of curve-based lattice structures that can be tailored to fill volumes or follow surfaces (Fig. 26). Additionally, the parameters of the lattice can be varied by incorporating data from topology optimization or even by editing elements individually.



FIG. 26. 3-matic filling a volume with a lattice structure. *Source*: http://software.materialise.com/sites/default/files/public/SAM/Products/3-matic/shoe-metal_heel_flow_0.jpg

There is significant interest in using 3D printed lattice structures in aircraft components to provide a lightweight means of structural reinforcement, practical functions such as heat transfer (e.g. a radiator), or even both functions in combination. However, lattices are difficult and expensive to manufacture by conventional methods. 3D printers can fabricate complex lattice structures along surfaces or inside volumes with little difficulty (although removal of supports or trapped material may pose a challenge). The application chosen for this exercise was low-pressure environmental control system (ECS) ducting (Fig. 27).



Fig 27. Print of original duct. *Source*: Author.

Aircraft use ECS ducting to maintain cabin climate and pressure, provide cooling air to electronics, or carry hot air away from some location. They often have sensors mounted to them to measure temperature or pressure, which requires the part to include attachment points and wiring guides. These type of parts are ideal candidates for Additive Manufacturing solutions because they meet several criteria: low production volume, high complexity, and multiple functions.

In this case, the part selected was a “notional” (i.e. not real) elbow which provided some geometric complexity: convex and concave curved surfaces, protrusions, ribs, and an integral bracket (Fig. 28). 3-matic was used to apply a lattice structure to the curved surfaces without altering the ribs or protrusions nor interfering with the fit of the bracket.

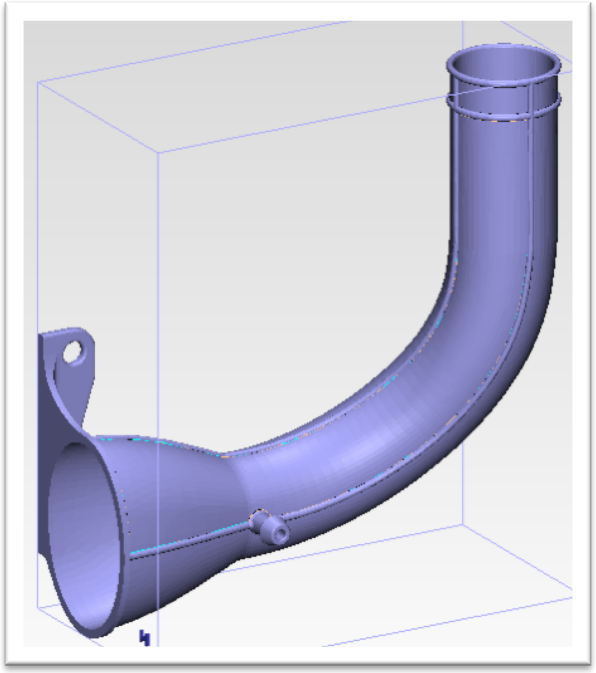

Fig. 28 Original duct to be modified for AM.
Source: Author.

The basic work flow of 3-matic is to import a CAD model, perform any necessary repairs to its surfaces, apply textures and/or lattice elements to selected surfaces, then export the model for 3D printing or analysis (Fig. 29).

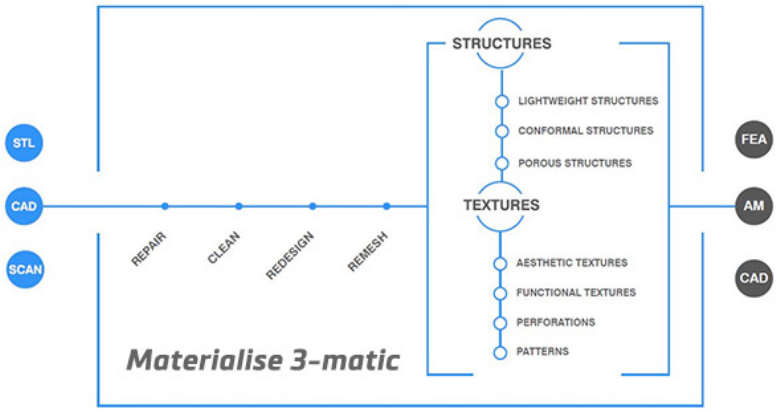

Fig. 29. Materialise diagram of 3-matic design work flow.
Source:
http://software.materialise.com/sites/default/files/public/SAM/Products/3-matic/3-matic_workflow_0.jpg

3-matics' features for applying 3D elements to a surface are derived from the image and texture mapping method developed for 3D illustration and animation software [x]. While the position and orientation of a 3D object in space is defined by an X, Y, and Z coordinate system, locations on the surface of a 3D object can be defined by a "UV" grid of perpendicular lines mapped onto the surface of the object or to selected sub-surfaces. Whereas in 3D illustration the UV pattern is used to position an image, in 3-matic the grid is used to position a 3D object. There are two types: a 3D texture element which is a polyhedron object such as a pyramid, or a "graph curve" which is a set of polycurves enclosed in a cubic volume. 3D textures are created by a repeating pattern (or random distribution) of texture objects on the UV surface of the part. Similarly, 3D lattice structures are created by defining a graph curve element (or elements) and distributing a repeating pattern of them on the surface using the UV grid.

The first step was to subdivide the surface model into selected sub-surfaces that would have lattices applied (Fig. 30)

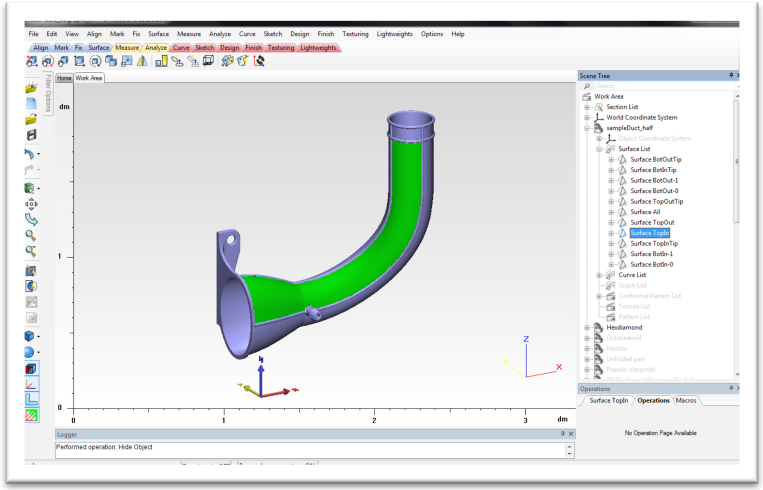

Fig. 30. Defining and selecting a surface in 3-matic.
Source: Author

Next, those surfaces had UV patterns assigned and oriented (Fig. 31)

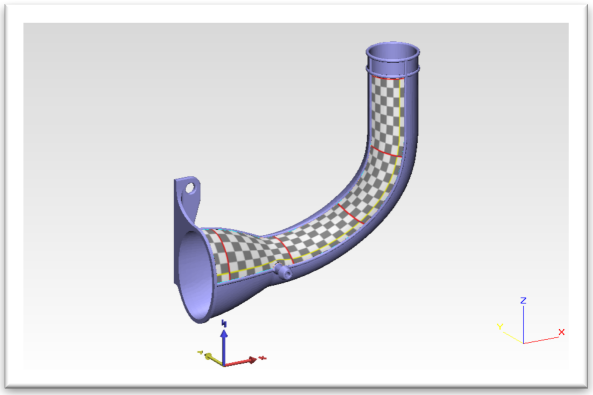

Fig. 31. Conformal UV grid pattern applied to the surface. *Source*: Author.

Next, a graph curve is selected and applied to the surface (Fig. 32).

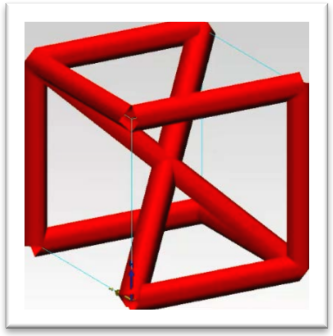

Fig. 32. Graph Curve example. *Source*: Materialise.

Once applied, the designer can control the parameters of the graph curve such as depth, thickness and overlap with adjacent graph curves. The result is a complex lattice structure that follows the surface curvature of the underlying object (Fig. 33).

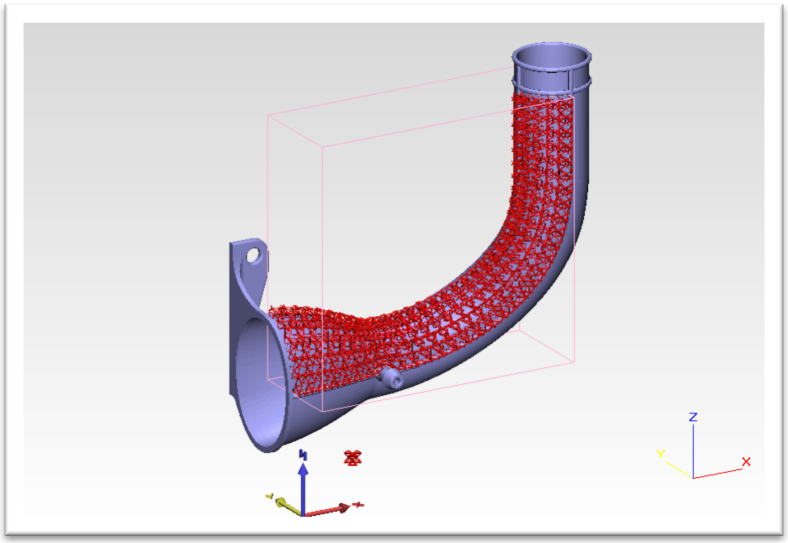

Fig. 33. Graph curves applied to the surface. *Source*: Author.

In practice, multiple iterations of the UV grid ratio (X and Y dimensions of the graph curve, in effect) and graph curve depth (Z dimension) were required to achieve a lattice structure that had a “good fit”, meaning that the lattice was neither too dense or too sparse, and that

rows were not truncated or excessively deformed so that the resulting "beam" aspect ratios (diameter vs. length) were too high to provide effective strength.

When satisfactory layout of graph curves is achieved, the lattice can be refined with editing tools. Unattached members can be deleted or individual members can be added as needed (Fig. 34).

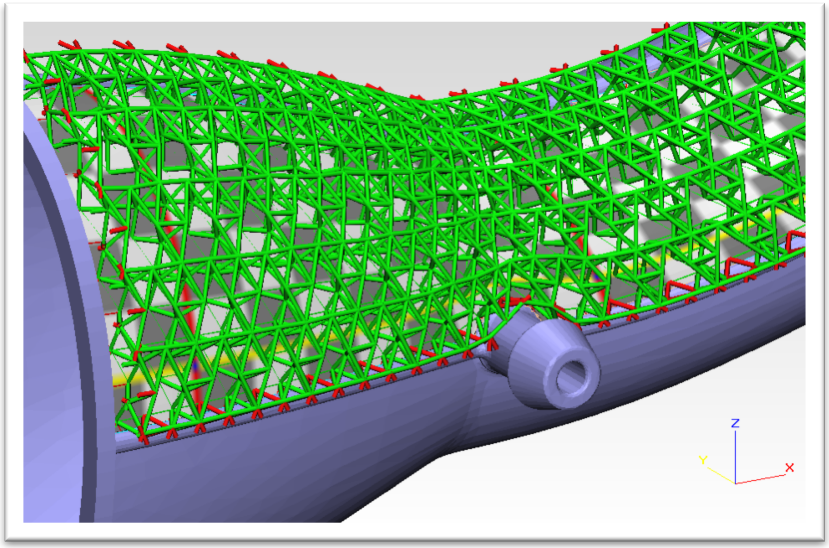

Fig. 34. Editing the lattice (red parts marked for deletion).
Source: Author

An initial part was built with an unrefined mesh applied to partial surfaces and printed to evaluate the strength of the printed lattice members, the difficulty of removing powder, and general durability. While print quality was good and the powder was easy to remove from inside the lattice, it was found to be somewhat weak—the 0.5mm diameter beams broke easily. The refined lattice elements retained the 0.5mm diameter but the member length was reduced. A final part was printed as well as an example of the original for comparison. The refined lattice was quite tolerant of handling and passed a simple "drop test" from table-top height onto a concrete floor. The weight of the original tube (printed in nylon) was 18.9 grams while the modified tube weighed 31.1 grams, or 60.7% more. Surface area of the lattice-modified tube was 1359 square cm compared to the surface area of the original tube of 475 square cm, or 286% more. The overall rigidity of the part was noticeably greater (though no measurements were taken).

A significant issue when designing highly complex lattice structures for 3D printing is the data structures of the files (Griggs et al, p. 227). The standard data format for describing a model to be 3D printed is the Standard Triangulation Language (STL). Since the STL file format

is a simple triangulated polygon mesh, it grows geometrically in proportion to the surface area of the encoded object (provided the triangle size remains the same). Lattices obviously have huge surface areas and the resulting STL files also become huge, especially if the resolution (triangle size) is set small. With small structural elements like 0.5mm diameter trusses it is necessary to use a fine tessellation to preserve the design intent (Fig. 35).

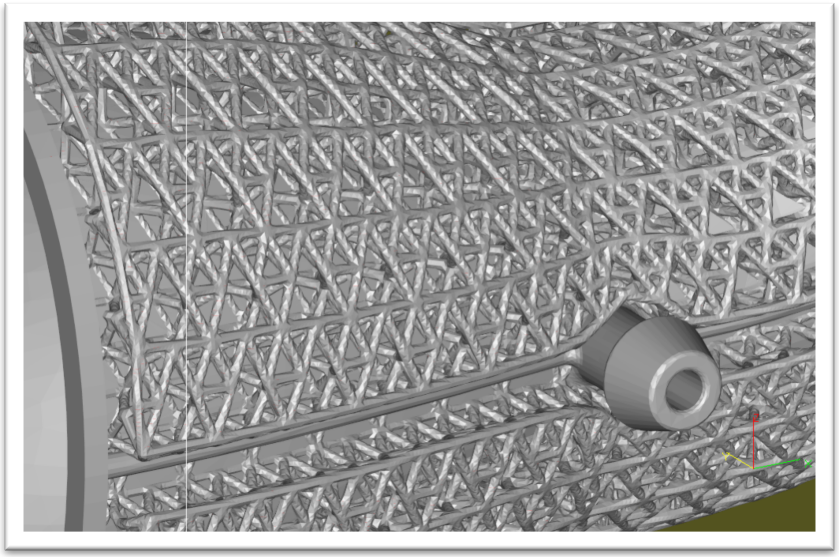

Fig. 35. Detail showing dense tessellation of lattice. *Source*: Author

As a result, the final STL version of the model can be large and cumbersome to manipulate in a CAD environment. Very large, complex STL models also pose challenges to 3D printers. Any process that requires supports to hold the object in place while printing will not be a good candidate for printing lattices because the dense structure makes it very difficult to remove the supports. The powder-based SLS process is recommended for printing lattices because the loose powder is fairly easy to remove post-print, although the deeper the lattice is the more difficult it can be to remove the powder. Another practical problem with polygon mesh models like the STL format is they do not meet the internal standards of manufacturing enterprises such as Boeing, which require production parts to be saved in parametric model formats that encode important metadata such as the design history, material type, dimensional relationships and notations. A polygon mesh is effectively an empty shell. Fortunately, 3-matic takes a partial step towards solving this problem. The graph curves in the Lightweight Structures Module are 3D NURBS polycurves that are assigned parameters of diameter and cross-section.

The polycurves at least can be saved and exported in IGES (Initial Graphics Exchange Specification) format which is compatible with solid modeling systems (Fig. 36) such as Boeing's standard CATIA (Griggs et al, 2005 p. 227).

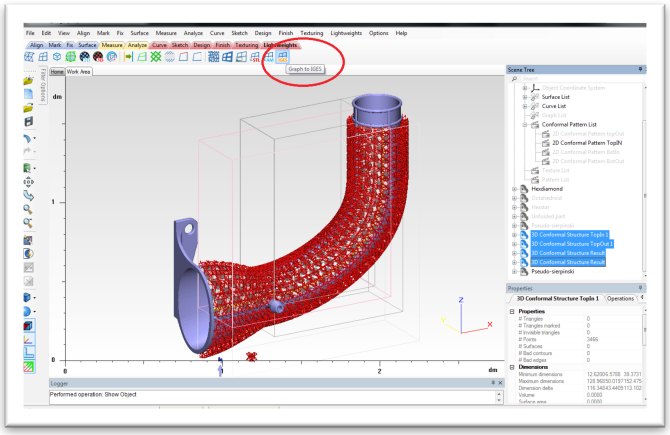

Fig. 36. Exporting graph curves as IGES. *Source*: Author

Materialise's 'Magics" application for 3D printing will import the IGES model (Fig. 37). This is very useful because its' smaller file size makes manipulation of the model much faster than would be the case for a large STL file.

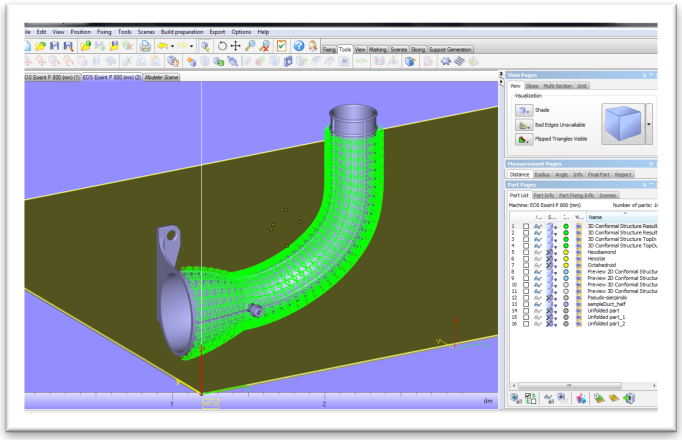

Fig. 37. IGES curve set represented in Materialise Magics. *Source*: Author

Finally, the IGES version of the lattice was successfully exported to CATIA where it was saved as a STEP or equivalent file. This satisfies the Boeing requirement for Model-Based Definition (Fig. 38).

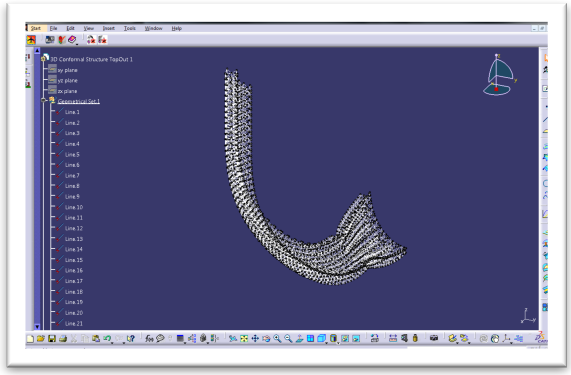

Fig. 38. IGES curve set imported into CATIA. *Source*: Author

This exercise demonstrated the ability of additive manufacturing to fabricate complex lattice structures that can be generated by specialized design software (Figures 39-42), but exposed some of the practical constraints that designers will need to understand: the need to manage the detail design of lattice elements, allow for the feature resolution limits of the printing process, and manage file size.

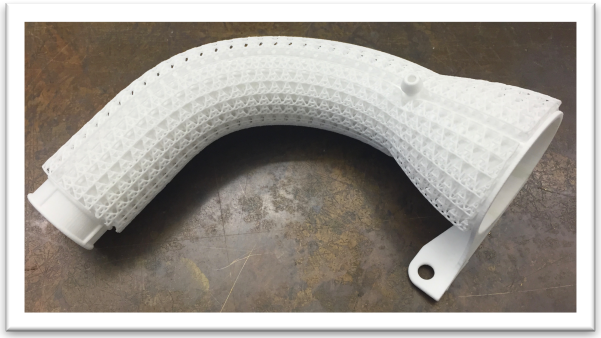

Fig. 39. Conformal lattice.

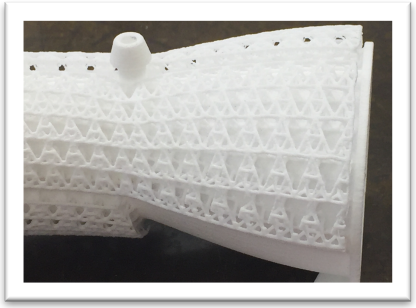

Fig. 40. Lattice boundaries.

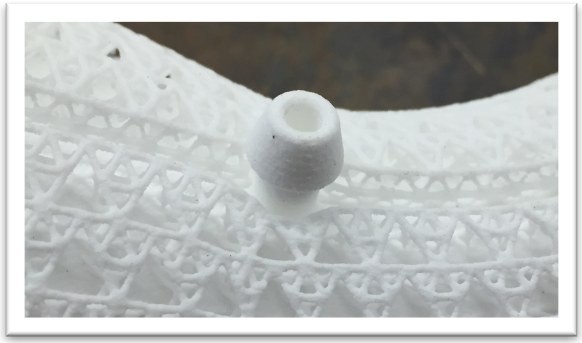

Fig. 41. Lattice



Fig. 42. Termination of lattice.

Design Problem 3: Tray Table Design Synergizing Topology Optimization with Generative Modeling

The intent of the third exercise was to use both types of modelers—topology optimization and generative— in the creation of a part. Importantly, this exercise not only addressed a design problem but also a process problem. The design problem was to make an interior part, where visual appearance is important and fit and finish must be to a high standard. In this case, an airline seat tray table, must meet one basic criteria for any table, which is to be perfectly flat (Fig. 43).

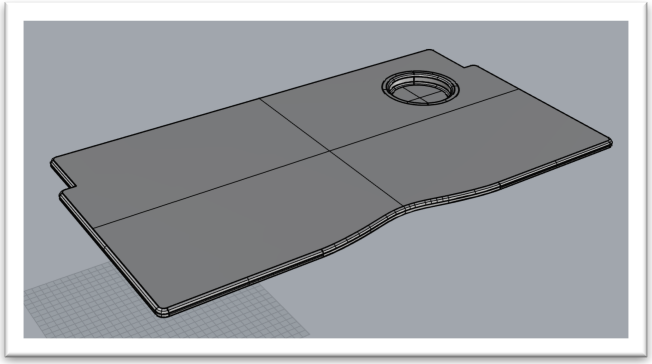

Fig. 43. Tray table modeled in Rhino.
Source: Author

This apparently simple requirement in fact confronts a process problem inherent in the type of 3D printer used for this exercise: A Selective Laser Sintering (SLS) printer (Lindstrom, 2012). SLS printers create parts from polymer or metal powder that is fused into a solid by the heat from a laser beam that selectively scans the surface of the powder. Because the melted powder shrinks as it cools, it is necessary to heat the build chamber the printer to a high temperature that prevents shrinking while the process is ongoing. In the case of the machines used for the exercises, P730 and P800 printers made by Electro-Optical Systems (EOS) of Germany, operating temperatures are 179C for the P730 using nylon powder and 289C for the P800 using PEKK powder (Fig. 44) .



Fig. 44. Build temperature in a P800 is 290C.
Source: EOS

Once the “build” is complete the heat is removed and the parts shrink as they cool to room temperature. The amount of shrink is known for materials, so accuracy is achieved by scaling the parts up before printing to offset the shrink. While dimensional accuracy is typically within +/- 0.05” per inch, the cooling process introduces an unwanted side-effect: distortion of parts due to thermal stress (Fig. 45).

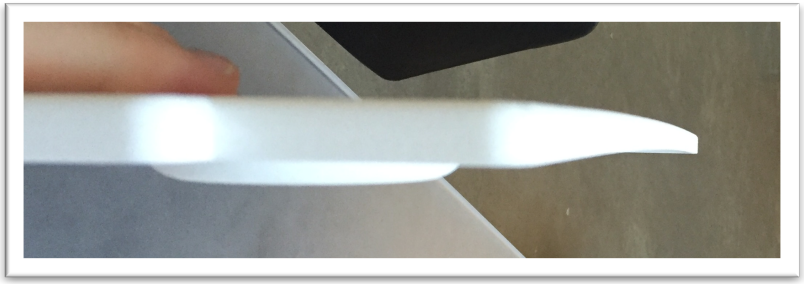

Fig. 45. Distortion of the long axis of the printed tray.
Source: Author

There are two types of stress on the part. First, is the differential cooling rate of large parts that span the chamber. Because the build chamber naturally cools from the outside inward, large parts will be cool first at the chamber edge while still hot in the middle, causing them to bend. Second, the shape of the part itself can induce distortion if it has an uneven distribution of mass. There are two ways to counter thermal distortion: Part positioning and design. Whenever possible a part should simply be positioned away from the chamber edges so it cools as evenly as possible. Designing a part’s geometry to resist thermal distortion is a more complex matter. Some parts will inevitably have an asymmetric distribution of material, i.e. a thick section and a thin section which will induce distortion because the thin section will cool faster than the thick one. The airline tray table provides a good case example of a part that is a challenge to print with SLS. It must be flat, it has a solid top side and an edge enclosing a hollow bottom side, plus an asymmetry caused by the cup holder indentation. The objective was not so much to design a fully-realized production tray table, but to see if combining topology optimization with the relatively even material distribution of a lattice could produce a tray table design tailored for production in an SLS printer that would resist thermal warping as it cooled. The idea was to use two methods to resist warping. The first was to attempt to balance the mass distribution of the table. Obviously this could be done by simply making the table solid, but that would result in a heavy object. By using 3-matic’s LWS module, the “empty” bottom volume could be filled with a light but constant lattice structure that would retain heat and hopefully balance

the solid table top. The second method was to use topology optimization to strategically vary the density of the lattice to distribute mass and heat in a way that might counteract the warping stresses. The main problem was to determine what material distribution would counteract the distortion from thermal stress. However, because there is not yet an effective software-based analysis method to predict how a part will distort in the printer (the distortion is dependent on variables that can be different in every print) a “work-around” solution was needed. The idea was to print several copies of the table and measure where and how much they distorted from the design intent, then program that distortion into the Inspire topology optimizer with the objective of maximizing the stiffness in the most-distorted locations.

A force vector was applied to the center of the tray while displacement constraints (settings which establish an allowance for part displacement in a particular direction) The mechanical load case was manipulated until the displacement predicted by the Inspire analysis matched the displacement measured in the physical parts (Fig 46).

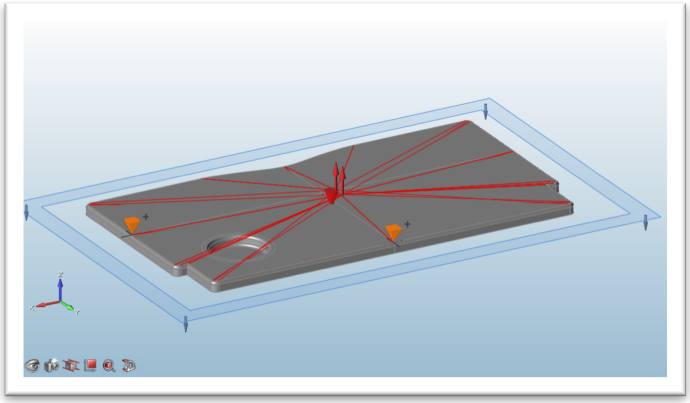

Fig 46. Inspire load case. Forces in red, constraints in orange. *Source*: Author.

This suggested that the mechanical load case effectively mimicked the real-world thermal stress acting on the parts in the printer. The interior of the underside of the tray was designated as the “design space” (Fig. 47).

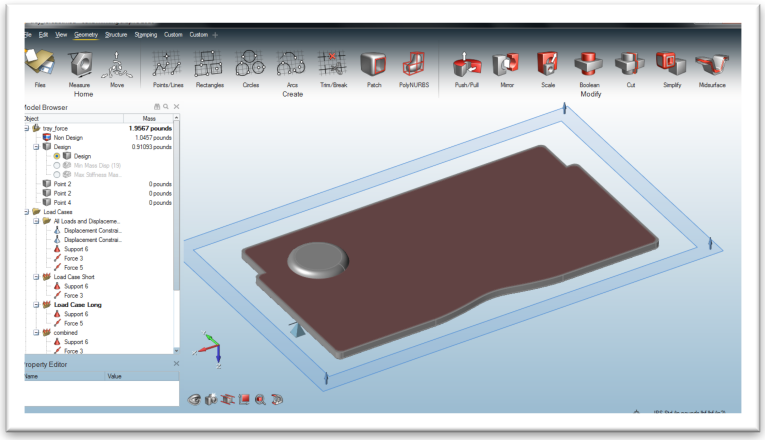

Fig. 47. The “design space” filled the underside of the tray.
Source: Author.

With the displacements modeled, it was possible to perform a “maximum stiffness” optimization to counteract those displacements. The result showed a distribution of mass in the center of the tray. A version of this tray was printed and measured. The results showed the displacement was significantly reduced, suggesting that the method of using topology optimization to mimic the thermal load with a mechanical load was effective. To test the concept, three trays were printed: one with no material distribution in the design space, one with the distribution predicted by the optimization, and one with a distribution opposite (“negative”) of the optimization. The resulting warp of the parts is shown in Figures 48-53.

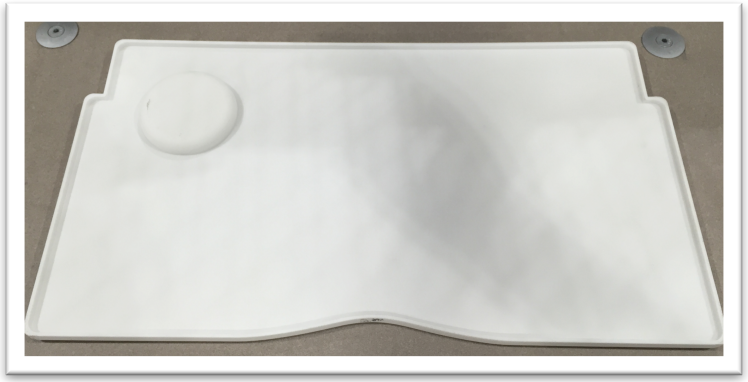

Fig. 48. Printed SLS tray with unfilled design space.
Source: Author

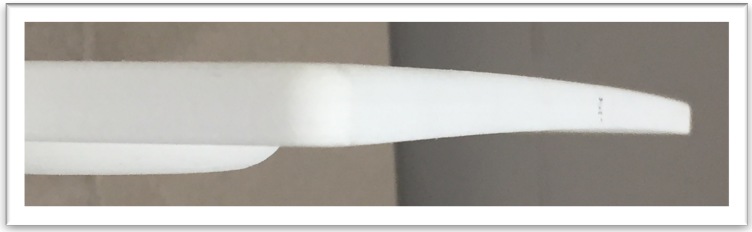

Fig. 49. Warp of tray with unfilled design space.
Source: Author.

Weight of the basic tray was 509.4 grams.



Fig. 50. Printed SLS tray with optimized distribution.
Source: Author.



Fig. 51. Warp of tray with optimized distribution.
Source: Author.

Weight of the optimized tray was 611.2 grams.



Fig. 52. Printed SLS tray with “negative” distribution.
Source: Author.



Fig. 53. Warp of tray with negative distribution.
Source: Author.

While this design theoretically satisfied the requirement to counteract thermal warping, it was not an aesthetically satisfying solution—essentially a “blob” of material (Fig. 54).

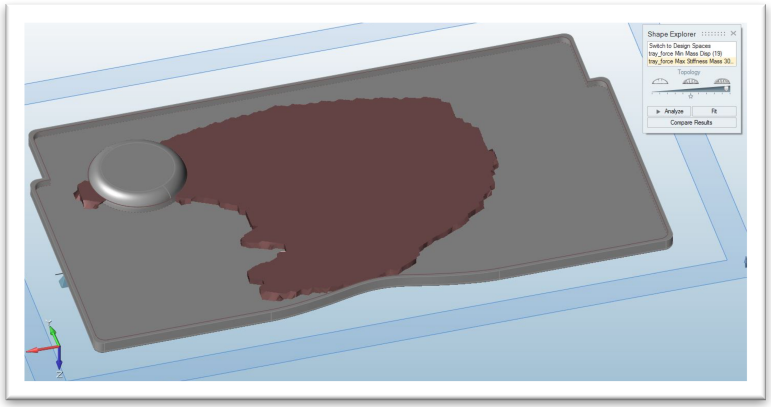

Fig. 54. Inspire load case result. *Source*: Author.

A preferred aesthetic solution was to fully fill the underside of the tray, but with a variable-density lattice structure that was high-density where the optimization placed material and low-density where it did not.

Boolean operations were performed to create a “negative space” object surrounding the “blob” which was further divided to create an area of intermediate density (Fig. 55).

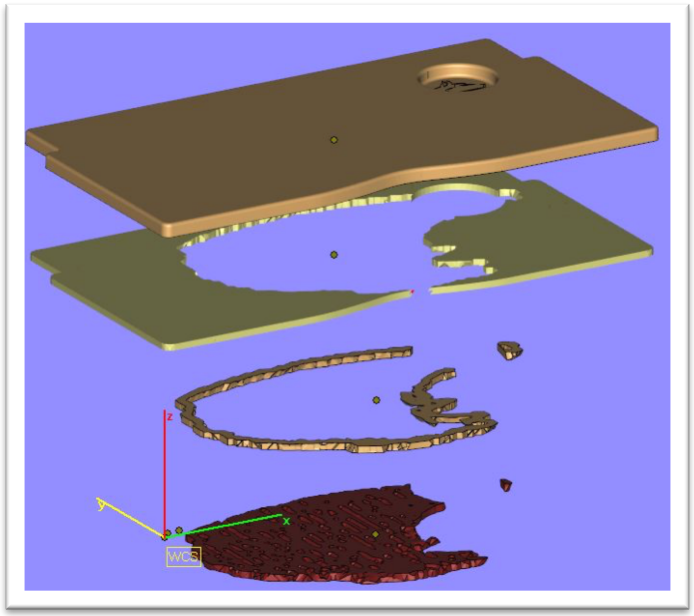

Fig. 55. Creation of volumes for variable-density lattice fill. *Source*: Author

The resulting lattice filled the entire interior volume of the tray (Fig. 56-57).

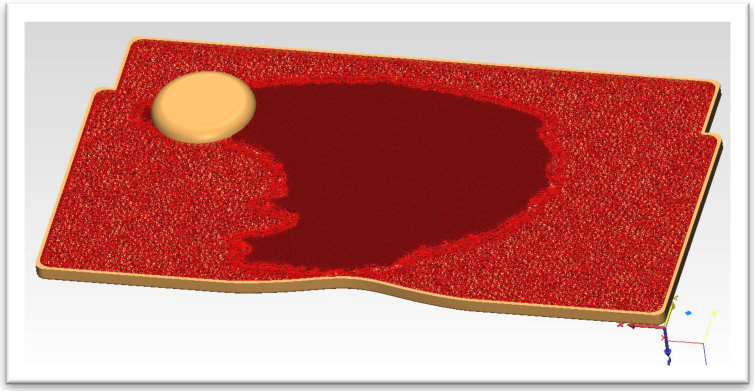

Fig. 56. Variable-density lattice structure. *Source*: Author.

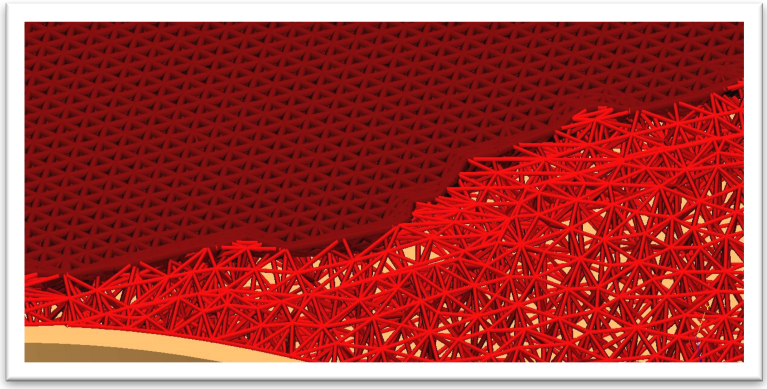

Fig. 57. Variable-density lattice detail. *Source*: Author

Performing this operation revealed one of the fundamental limitations of current design representation for Additive Manufacturing, which is that the requirement to represent objects as polygon mesh models for printing creates extremely large files. In this case, the lattice interior of the tray was 1.2 gigabytes which made it extremely slow to manipulate parameters in 3-matic and very slow to export the model (46 minutes). Ultimately, the complexity of the resulting "slice" data of the cross-sections was such that the printer "crashed", or stopped operating because it could not print layers. An alternative solution was to fill the design space with a simpler, less memory-intensive lattice and see how much a printed version would warp. The results were positive (Figures 58-60).

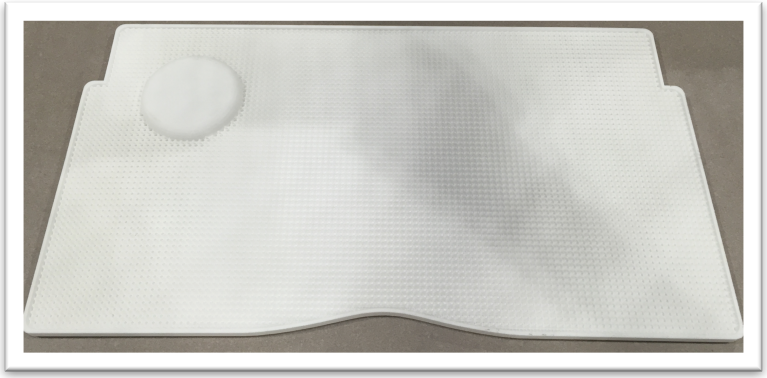

Fig. 58. Tray with lattice fill. *Source*: Author



Fig. 59. Distortion of lattice tray is minimal. *Source*: Author

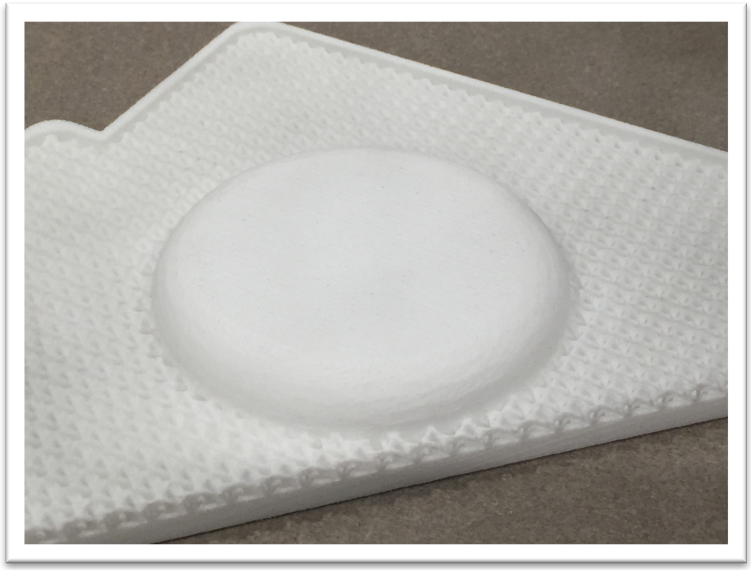

Fig. 60. Detail of lattice fill. *Source*: Author

Weight of the simplified lattice tray was 562.5 grams, only 53.1 grams or 10.5% more than the unfilled tray vs. 101.8 grams or 16.7% more for the solid optimization.

This provides a good example of the necessity of more advanced file formats and process controls. The standard for translation from the representation tool to the manufacturing process has lagged behind the printing technology.

Conclusions

Additive Manufacturing technology is in need of global standards for materials, processes and, in particular, data formats. There is a need for more additive materials that meet existing government and industry standards for aircraft, automotive and other manufacturing sectors. Of the thousands of available metal alloys and polymers, there are just tens of additive materials that are test-qualified for production under existing standards. Therefore, designers have a limited palette of materials available to them when they are tasked with designing parts intended for use in production of aircraft, cars, etc.

There are two options for dealing with this challenge. The first is simply to qualify more materials. This means putting an increased emphasis on development and testing, which requires greater investment by industry and more engagement with government standards agencies such as the National Institute of Standards and Technology (NIST). The second option is for designers to be as creative as possible with the limited number of materials available. To enable that creativity, designers will need appropriate tools such as generative modelers and topology optimizers.

In terms of process, it's clear that 3D printing is still in its infancy. Even the most advanced 3D printers available today do not operate with the degree of reliability and precision that is typical of established production technologies such as machining, injection molding, casting, etc. For Additive Manufacturing *in situ* process control is limited. Most machines lack any process control monitoring at all and the few machines that do, have relatively primitive controls compared to established manufacturing processes. For example, in the exercise to design the tray table, a very crude method was used to attempt to predict the thermal distortion of the part inside the printer. These methods were moderately successful, which suggests that a sophisticated model of the thermal environment inside the printer could enable the printer to predict how a part would deform and automatically alter the part geometry to compensate. As well with process, most additive manufacturing processes do not scale well. For example, there are basic thermodynamic restrictions on chamber size or prohibitive mass of material in powder-bed printers. A volume of material being heated from the outside can only be so big before it becomes impossible to maintain a constant temperature throughout. Extrusion printers have been successfully scaled up. Polymer printers

have made vehicles; concrete printers have made houses. However, once again, robust process controls are needed to counter the significant propagation of error typical of extrusion printers. Current large-scale (beyond one cubic meter) polymer extrusion printed parts must be made to “net shape” (meaning a slightly-oversized model) and post-machined (touched-up) to meet required dimensional tolerances.

In the domain of representation, the most obvious limitation is the lack of a robust file format for encoding parts for Additive Manufacturing. The current standard format, the STL file, is 30 years old – ancient in software terms. First, it encodes only the outer surface of the desired part and nothing else. For a fabrication technology capable of building parts “from the inside out”, depositing materials at different densities or depositing multiple materials, it makes no sense to use a data format that is incapable of encoding such information. Additionally, improving resolution or increasing the part size will massively increase file size. One of the greatest advantages of 3D printing – the ability to create complex geometries such as a lattice – is severely compromised by the need to encode it as a polygon model. As seen in the tray table model, the file exceeded the printer’s capacity. These inherent limitations of polygon mesh models have disqualified them as production standard format at Boeing and other top-tier manufacturers. The industry requires an advanced file format the encodes more of the part data to take full advantage of 3D printing potential. There is an ongoing effort to replace the STL file with a XML-based standard AM file format. The AMF (Additive Manufacturing Format) introduced in 2011 by the ASTM (American Society for Testing and Materials) and the more recent Microsoft-developed 3MF (3D Manufacturing Format) are contending for this privilege. The main goal of the effort is to emulate the success of standard file formats developed for CNC milling, like IGES and STEP, which include metadata about material and manufacturing operations, as well as encoding geometry in a manner that facilitates conversion. An XML-based AM format will include information such as multiple material types, tolerances, colors, surface textures, and support for curved surfaces. When a truly robust, versatile file format is standardized, this will pave the way for manufacturers such as Boeing to formally adopt representation tools that are intended for Additive Manufacturing. The generative tools such as 3-matic already output their models as parametric curves, but topology optimizers such as Inspire inherently output mesh models. Tools for converting polygon mesh models into

NURBS models remain expensive and labor-intensive to use, adding time and expense to the process of creating additive designs that meet industry modeling standards.

However, despite the limitations just described, more additive materials are becoming available, machines are improving, process controls are being introduced, and design software tailored for Additive Manufacturing is becoming more capable. As well, the standards that allow knowledge to be encoded and transmitted between domains are becoming established. In the “big picture” this means that innovation and advancement are occurring in all three design domains: The design space for Additive Manufacturing is expanding. The most important implication of this is that designers must incorporate all of this new knowledge and capability into their practice. They must understand the properties of additive materials, the opportunities and limitations of various additive processes, and they must learn to use appropriate design tools such as generative modelers and topology optimizers. Obviously this is a significant undertaking, requiring organizations in all three design domains to formalize training and education about AM. Boeing’s effort to adopt CATIA is a relevant example. The company instituted a large and comprehensive training program and committed to incorporating CAD into the design process. For manufacturing enterprises like Boeing to adopt AM fully as an integral means of production, a similar education and training effort will be required at multiple levels. Technicians operating machines must receive proper training so they can consistently produce quality results, and provide knowledgeable feedback to designers. Designers must learn to think more expansively about form and material, taking inspiration from nature as much as possible. They must have appropriate representation tools, and receive training and support to become proficient in their use. Topology optimization, in particular, is a science unto itself that requires significant grounding in math, physics, and even thermodynamics. Finally, just like specialists in other fields of design, designers working with AM must “network” with each other and develop a Community of Practice to nurture their burgeoning specialty. Once the DFAM community is established and thriving, sharing knowledge about AM materials, processes, and form-finding, there is virtually unbounded potential to expand the manufacturing Design Space for the benefit of all.

References

Bin Maidin, S.; Campbell, I.; Pei, E., “Development of a Design Feature Database to Support Design for Additive Manufacturing”, *Assembly Automation* (2012): 32(3): 235-244.

Cunningham, J., “The Long Road to Qualification”, *Engineering Materials,* June 22, 2015, http://www.materialsforengineering.co.uk/engineering-materials-features/the-long-road-to-qualification/86548/

Doubrovski, E. L., Verlinden J.C., and Geraedts, J. M. P. “Optimal Design for Additive Manufacturing: Opportunities and Challenges”, *ASME IDETC Conference, DETC*. (2011): Vol. 48131.

Geraedts, J. M. P., et al., “Three Views on Additive Manufacturing: Business, Research, and Education”, TMCE, 2012.

Hague, R., Campbell, I. and Dickens, P., “Implications on Design of Rapid manufacturing”, *Proceedings of the Institution of Mechanical Engineers, Part C: Journal of Mechanical Engineering Science* (2003): 217(1): 25-30.

Hague, R., Mansour, S. and Saleh, N. “Material and Design Considerations for Rapid Manufacturing”, *International Journal of Production Research* (2004): 42(22): 4691-4708.

Lindstrom, A., “Selective Laser Sintering: Birth of an Industry”, *University of Texas at Austin Department of Mechanical Engineering*, Dec. 6, 2012 http://www.me.utexas.edu/news/news/selective-laser-sintering-birth-of-an-industry#ch4

Lipson, H., Kurman, M., *Fabricated: The New World of 3D Printing*, (Wiley & Sons, Inc., 2012)

Marion, T., Fixson, S., Meyer, M. “The Problem with Digital Design” *MIT Sloan Management Review*. (Summer 2012) Vol.53 No.4

Oxman, N., Rosenberg, J. R., “Material-Based Design Computation: An Inquiry into Digital Simulation of physical material properties as design generators”, *International Journal of Architectural Computing* (2007) Vol.5(1): 26-44.

Oxman, N. "Variable-Property Rapid Prototyping”, *Virtual and Physical Prototyping* Vol.6.1 (2011): 3-31.

Rosen, David W. "Design for Additive Manufacturing: A Method to Explore Unexplored Regions of the Design Space." *Eighteenth Annual Solid Freeform Fabrication Symposium*. 2007.

Schön, D.A. *The Reflective Practitioner How Professionals Think in Action,* (Basic Books, Inc., 1983)

Self, J. “Tools of Design Representation and Conceptual Design Practices”, *Core77*, July 21, 2014, http://www.core77.com/posts/27344/tools-of-design-representation-and-conceptual-design-practices-by-james-self-27344

Schodek, D., Bechtold, M., Griggs, K. et al, *Digital Design and Manufacturing: CAD/CAM Applications in Architecture and Design*, (Hoboken: John Wiley & Sons, 2005)

Talbot, D. “Boeing's Composite Problem. Structural weakness forces Boeing to retrofit the 787 Dreamliner.” *MIT Technology Review.* April 18, 2008 https://www.technologyreview.com/s/409929/boeings-composite-problem/

Wiki Commons, *CSG Tree*, 2012, https://commons.wikimedia.org/wiki/File:Csg_tree.png